Qualwave

Digital Controlled Attenuator

QDA-9K-40000-61.5-0.5

9kHz~40GHz, 61.5dB, 0.5dB



Features:
* Broadband
* High Dynamic Range

Applications:
* Laboratory Test
* Telecommunication
* Wireless
* Instrumentation

Electrical

Frequency:	9kHz~40GHz
Insertion Loss:	8dB typ.
Step:	0.5dB
Attenuation Range:	0~61.5dB
Attenuation Accuracy:	±1dB typ. @0~29.5dB
	±3dB typ. @30~61.5dB
VSWR:	1.8 typ.
Voltage/Current:	-5V @10mA typ.
Switching Time:	100ns typ.
Logic Input:	On: 1(+3.3~+5V)
	Off: 0(0~+0.8V)

Absolute Maximum Ratings*1

Input Power:	+24dBm
Control Voltage:	+5.5V
Power Supply Voltage:	-5.5V

[1] Permanent damage may occur if any of these limits are exceeded.

Mechanical

Size*2:	30*20*12mm
	1.181*0.787*0.472in
RF Connectors:	2.92mm Female (Removable)
Power Supply & Control Interface Connectors:	J30J-9ZKP
Mounting:	4-Φ2.2mm through-hole

[2] Exclude connectors.

Pin Numbering

Pin	Function	Pin	Function
1	C1:-0.5dB	6	C6:-16dB
2	C2:-1dB	7	C7:-30dB
3	C3:-2dB	8	VEE
4	C4:-4dB	9	GND
5	C5:-8dB		

Environmental

Operating Temperature:	-45~+85℃
Non-operating Temperature:	-55~+125℃

Outline Drawings

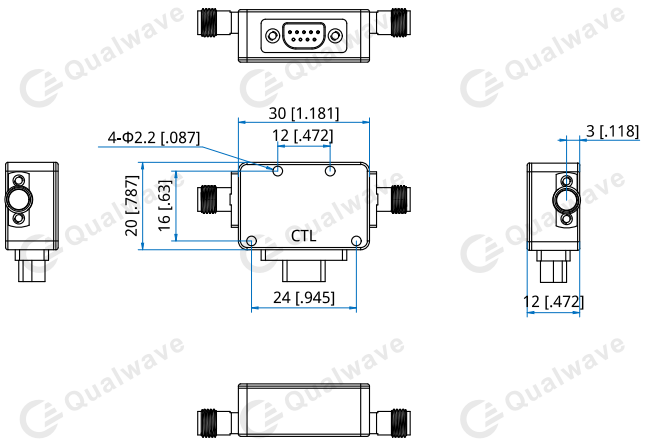

Unit: mm [in]

Tolerance: ±0.5mm [±0.02in]

Logic Table

State	C1	C2	C3	C4	C5	C6	C7	VEE	Attenuation State
-	0	0	0	0	0	0	0	-5V	Reference IL
1	1	0	0	0	0	0	0	-5V	0.5dB
2	0	1	0	0	0	0	0	-5V	1dB
3	0	0	1	0	0	0	0	-5V	2dB
4	0	0	0	1	0	0	0	-5V	4dB
5	0	0	0	0	1	0	0	-5V	8dB
6	0	0	0	0	0	1	0	-5V	16dB
7	0	0	0	0	0	0	1	-5V	30dB
8	1	1	1	1	1	1	1	-5V	61.5dB

How To Order

QDA-9K-40000-61.5-0.5

Customization is available upon request.

Typical Performance Curves

