QLAS-0.1-40000-27-30

0.1MHz~40GHz, 27dB, 3.0dB

Features:
* Broadband
* Low Noise

Applications:
* Wireless
* Receiver
* Laboratory Test
* Radar

Electrical

Frequency:	0.1MHz~40GHz
Gain:	27dB typ.
Gain Flatness:	±1.5dB typ.
Output Power (P1dB):	13dBm typ.
Noise Figure:	3.0dB typ.
Spurious:	-60dBc max.
VSWR:	1.8 typ.
Voltage:	+85~+265V AC
Impedance:	50Ω

Absolute Maximum Ratings*1

RF Input Power:	+18dBm

[1] Permanent damage may occur if any of these limits are exceeded.

Mechanical

Size*2:	136*186*52mm
	5.354*7.323*2.047in
RF Connectors:	SMA Female

[2] Exclude connectors, rack mount brackets, handles.

Environmental

Operating Temperature:	-20~+50℃
Non-operating Temperature:	-40~+85℃

How To Order

QLAS-0.1-40000-27-30

Customization is available upon request.

Outline Drawings

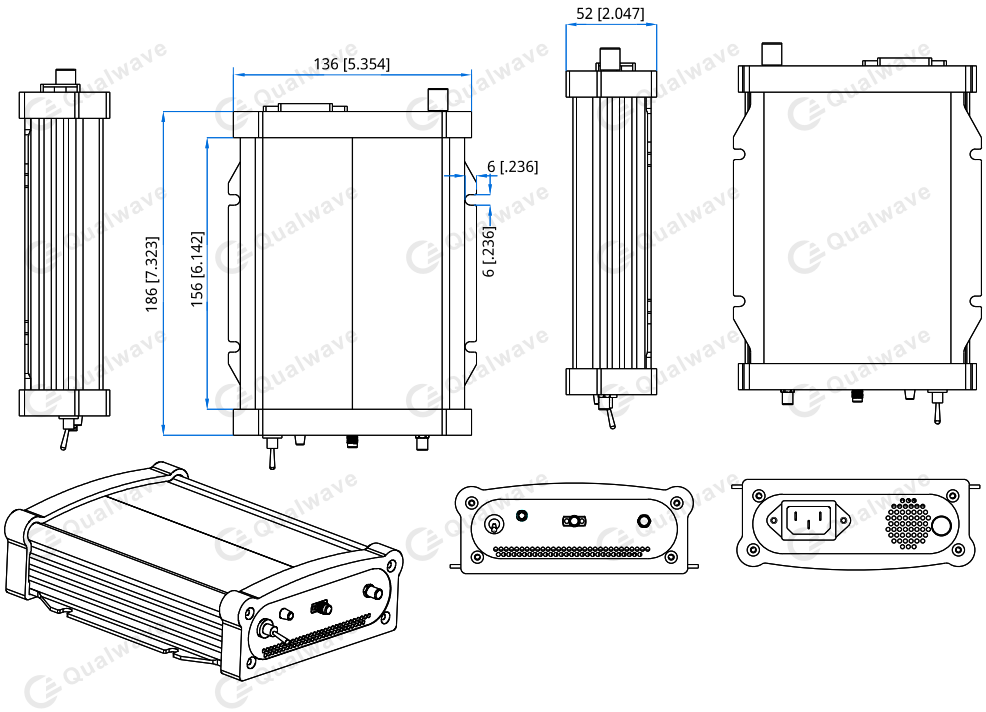

Unit: mm [in]
Tolerance: ±0.2mm [±0.008in]